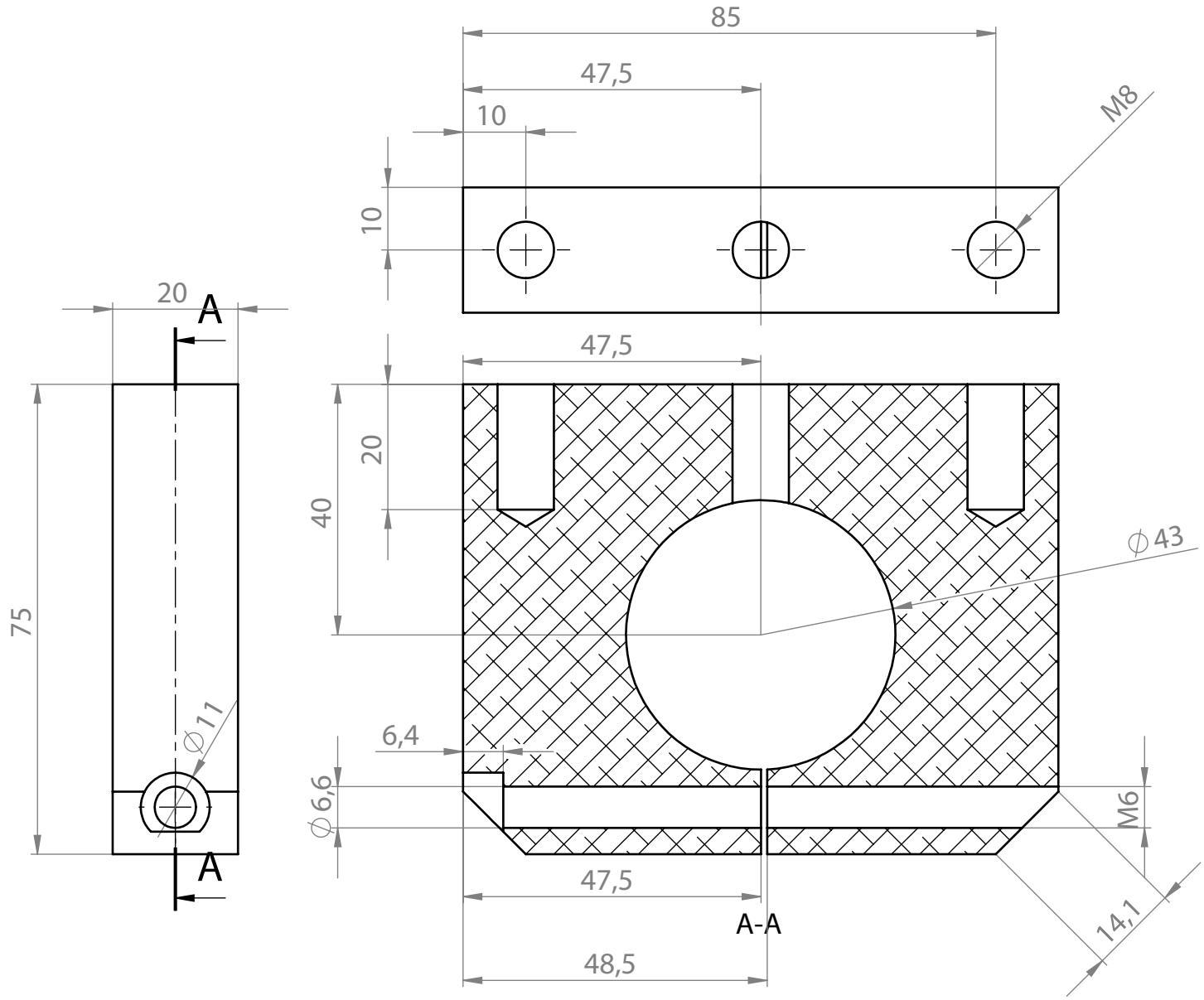

TROCHILI DESIGN	Kress mount	Date 21-8-2013		Scale 1:1	Unit of measure mm
		Signed M.R. Grössl		Format A4	Weight
					Drawingnumber 5-7